HEINE SLR | SLM Camera Adapter

FIRST STEPS

Meaningful and detailed digital images of the highest quality contribute to binding and comprehensible documentation. The combination of the HEINE DELTA 30 or HEINE DELTA 30 PRO, the HEINE SLR | SLM Camera Adapter and a DSLR or DSLM camera creates a comprehensive system for documenting consistently high-quality images.

AT A GLANCE

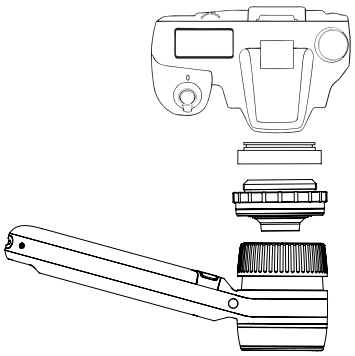

The HEINE SLR | SLM Camera Adapter is available either with a bayonet connection for digital single-lens reflex (DSLR) cameras and a T2 universal connection with the digital single-lens mirrorless (DSLM) cameras. When purchasing the HEINE SLR | SLM Camera Adapter with a T2 universal connection, a T2 adapter with bayonet camera connection is required to connect the digital camera to the HEINE SLR | SLM Camera Adapter. Bayonet adapters are generally longer for mirrorless system cameras and shorter for DSLR cameras.

Finding the right adapter:

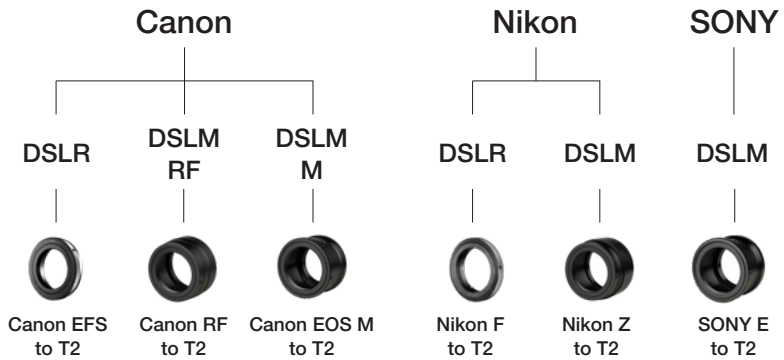

These HEINE camera adapters including the bayonet adapters are available for the following digital cameras:

Brand	Bayonet adapter	HEINE SLR | SLM Camera Adapter
Canon	DSLR EOS EF	K-000.34.141
	DSLM EOS R	K-000.34.142
	DSLM EOS M	K-000.34.143
NIKON	DSLR NIKON F	K-000.34.144
	DSLM NIKON Z	K-000.34.145
SONY	DSLM SONY E	K-000.34.146
Universal	Already available	K-000.34.140

LET'S GET STARTED!

▶ Assembly

For the complete assembly, you need a digital camera, a HEINE DELTA 30 or HEINE DELTA 30 PRO, the HEINE SLR | SLM Camera Adapter with bayonet adapter or the HEINE SLR | SLM Camera Adapter with T2 universal connection and a T2 bayonet adapter.

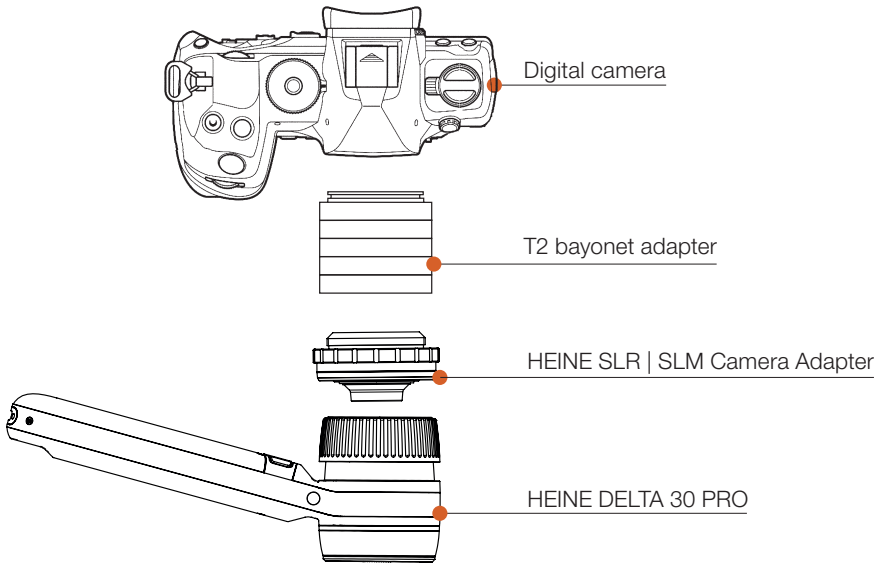





- ▷ Connect the camera adapter to your camera. To do this, the camera adapter must be screwed onto the T2 bayonet adapter.
- ▷ Look for the red or white dot on the bayonet adapter and on the camera's bayonet connection. Align both points accordingly and turn the camera adapter until it clicks into place. If you have any problems connecting the screw cap, please refer to your camera's user manual for more information.
- ▷ Turn the eyepiece on the dermatoscope to the centre position. The edge of the eyepiece ring of the HEINE DELTA 30 PRO should be slightly above the centre line on the scale.
- ▷ Bring your camera up to the eyepiece of the dermatoscope using the camera adapter. Make sure that there are no foreign objects on the ring and the adapter. The connection is established as soon as the adapter lies flat on the eyepiece ring and there is a noticeable magnetic connection. The dermatoscope can still be rotated on the camera adapter.
- ▷ Switch on the dermatoscope. Select the highest light intensity level and the desired colour temperature for the HEINE DELTA 30 PRO.
- ▷ Once you have set up the camera correctly (see the instructions below) and focussed the image by turning the eyepiece ring, you can start taking dermatoscopic images.
- ▷ To detach the dermatoscope from the camera adapter, tilt it slightly or pull it off the dermatoscope.
- ▷ **Attention! Always** hold the dermatoscope with one hand and the camera with the other. The camera adapter's magnetic force is **not enough** to hold your camera or dermatoscope securely without the support of your hands.

▶ Adjusting the camera settings

The camera adapter's aperture and focus are fixed and cannot be changed. There are no electronic contacts, as is the case with some interchangeable lenses. So certain operating modes cannot be selected on the camera.

We recommend selecting the maximum digital zoom level to adjust the sharpness precisely for the first application. Always work with the dermatoscope at the highest light intensity level.

As a rule, all digital cameras have a rotary dial on the top, which is labelled with letters, numbers and symbols. This sets the camera operating mode. The following settings must be observed to ensure that the camera adapter and camera interact perfectly.

▷ White balance

The colours of your images may look unnatural if your camera's automatic white balance is activated. If it is activated, please use your camera's preset settings. You will achieve the best result if you use your camera's manual or 'custom' white balance.

The suitable presets for the HEINE DELTA 30 have a value between 5,000 K and 6,000 K for the colour temperature. (These are the 'Direct sunlight' or 'Flash' settings on some camera models.)

The suitable presets for the HEINE DELTA 30 PRO depend on the colour temperature set on the device:

Colour of the colorSHIFT status indicator	Suitable preset
Orange	Select a value between 5,000 K and 6,000 K for the colour temperature. The 'Direct sunlight' or 'Flash' settings are suitable on some camera models.
Purple	Select a value between 6,000 K and 7,000 K for the colour temperature. The 'Cloudy' or 'Daylight fluorescent tube' settings are suitable on some camera models.
Light blue	Select a value between 7,000 K and 8,000 K for the colour temperature. The 'Shade' or 'Daylight fluorescent tube' settings are suitable on some camera models.
Dark blue	Select a value between 8,000 K and higher for the colour temperature. The 'Shade' setting is suitable on some camera models.

For more information on setting the manual white balance, please refer to the user manual for your camera model. Please ensure that the colour temperature set on the HEINE DELTA 30 PRO matches the camera settings.

▷ ISO sensitivity

Some types of camera can be operated with an automatic ISO function. You can work with it in principle. However, for the digital documentation of your images to be as precise as possible, the results must be comparable and reproducible. That is why we recommend using a fixed ISO sensitivity value of 400 to 800 for the HEINE DELTA 30 or HEINE DELTA 30 PRO. The image becomes significantly darker at lower values and significantly brighter at higher ISO values.

▷ Exposure time

Some types of camera can be operated with an automatic exposure time. You can work with it in principle in a similar way to the automatic ISO function. But, for a reliable result, we suggest using a fixed exposure time between 1/30 and 1/50 sec. at an ISO sensitivity of 400 to 800. Longer exposure times produce brighter images, while shorter exposure times produce darker images.

▷ Camera operating mode

We recommend using manual mode to minimise the impact that your camera's automatic systems have on the result. Here, you can determine all the parameters described yourself.
The image is automatically corrected in most modes on many camera models. This may even apply to manual mode if the ISO sensitivity is set to automatic. Please refer to the manual for your camera model for more detailed information.

▷ Digital zoom

The image is focussed manually using the eyepiece adjuster on the dermatoscope. We recommend using your camera's highest digital zoom level to find the optimum sharpness for the image. Once you have set the desired sharpness for the image, you are free to select the digital zoom to suit your requirements.

▷ Image quality

We recommend setting ‘Fine jpg’ or a correspondingly high-res format on the camera for the highest image quality. Compression artefacts may distort the image at low quality levels.

▷ Summary

Camera parameters	DELTA 30	DELTA 30 PRO	Remarks
White balance	Auto	Auto	Result may appear unnatural in terms of colour. Very much depends on the camera manufacturer and camera model
	Fluorescent preset Sunlight preset	**Warm white** Fluorescent preset Sunlight preset **Neutral** Cloudy **Coldwhite** Shady **Blue cold white** Shady	Very good results can be achieved in terms of colour depending on the manufacturer and camera model
	Manual	Manual For every colour temperature	Optimum results
ISO sensitivity	400 to 800	400 to 800	Set the dermatoscope to the highest light intensity
Exposure time	1|30 to 1|50	1|30 to 1|50	Set the dermatoscope to the highest light intensity
Camera operating mode	Manual	Manual	
Recommended image format	APS-C, DX	APS-C, DX	Full format is possible, but with lower sharpness and greater distortion at the edge
Image quality	Fine jpg	Fine jpg	Select the format with the lowest compression

▶ Recommended image format

The size of the field of view and the quality of the image in the edge area differ depending on the size of the image sensor. With the APS-C or DX format – also known as compact format – you can achieve an uncropped image in a sufficient size for your images.

Full-format images are possible, but the edges of the adapter’s lens optics are visible and blurring occurs at the outer edge of the image. Most digital cameras with a full-format image sensor can easily be converted to the slightly smaller compact format.

Image sensor designation	Full format	Compact format
Manufacturer designation	APS	DX, APS-C
Size of the image sensor	36 x 24 mm²	24 x 16 mm²
Size of the field of view	24 x 14 mm²	14 x 10.5 mm²

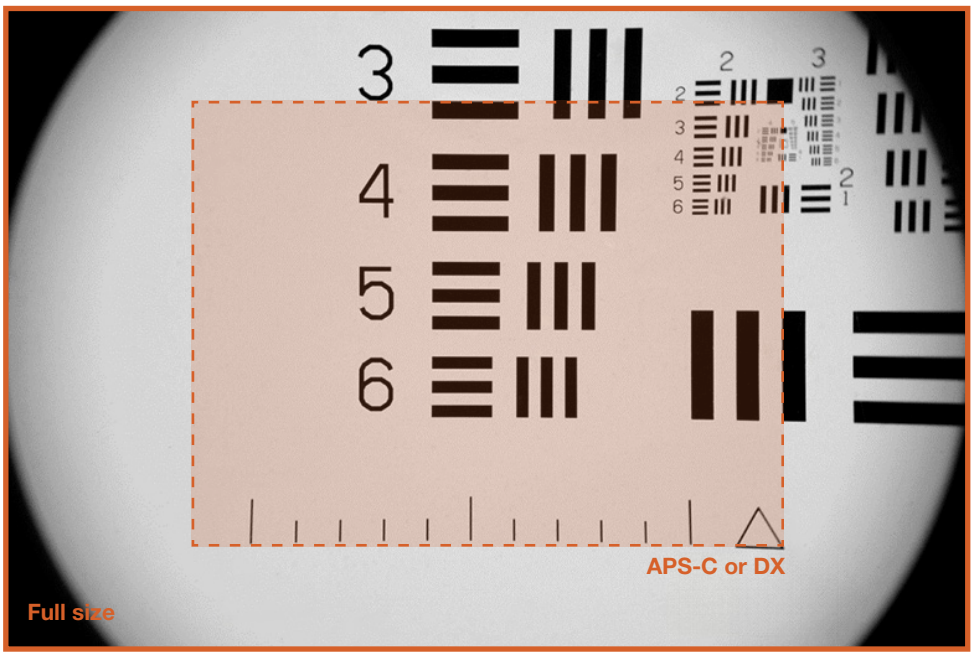

MORE INFORMATION

If you have any further questions about the product or the correct application, you can contact our Customer Support team or an authorised distributor in your local area at any time.

info@heine.com
www.heine.com/en/contact
www.heine.com/en/find-a-distributor

WARNINGS AND SAFETY INFORMATION



CAUTION! This symbol indicates potential hazardous situations. Ignoring the corresponding instructions may lead to dangerous situations of mild to moderate extent. (Background colour yellow; foreground colour black).



NOTE! This symbol indicates valuable advice in terms of set up, operation or maintenance, as applicable. Notes are important, but not related to hazardous situations.

DESCRIPTION

The HEINE SLR | SLM Camera Adapter with HEINE DELTA 30 and HEINE DELTA 30 PRO has been exclusively developed and optimized for a rapid and systematic documentation of pigmented lesions and does not replace a medical diagnosis. No diagnoses should be made based on a digital image alone.

CLEANING, DISINFECTION AND STERILIZATION

A dry cloth is recommended for cleaning the SLR | SLM Camera Adapter. Disinfection and sterilization are not necessary as the SLR | SLM Camera Adapter does not come into contact with the patient. Do not spray the device with liquids.

MAINTENANCE

The device is maintenance free.

SERVICE

The device has no components serviceable by the end-user.

GENERAL NOTES



The warranty for the entire product is invalidated if non-genuine HEINE products or non-original parts are used and if repairs or modifications are made to the device by persons not authorized by HEINE. For more information, please visit www.heine.com.
The expected life cycle, when the device is normal used and the warning and safety information as well as the maintenance instructions are observed, is up to 7 years. Beyond this period, the product may continue to be used if it is in a safe and good condition.

GENERAL WARNINGS



Check the correct operation of the device before use! Do not use the device if there are visible signs of damage. Do not modify the device. Use only original HEINE parts, spare parts, accessories and power sources. Repairs shall only be carried out by qualified persons.

EXPLANATION OF UTILIZED SYMBOLS

The following symbols are used on the device or on the packaging.

REF	Catalogue- or reference number
	Manufacturer
	Please read and follow these instructions for use and keep them for future reference. (Background: blue, foreground: white)
UDI	Unique Device Identification

HEINE Optotechnik GmbH & Co. KG | Dornierstr. 6 | 82205 Gilching | Deutschland Тел.: +49 8105 7728 0
Факс: +49 8105 7728 202 | Электронная почта: info@heine.com
ООО «МЕДТЕХНИКА-СТОЛИЦА» Москва
Уполномоченный представитель, импортёр и дистрибьютор HEINE Optotechnik GmbH & Co. KG в РФ
Тел.: +7 967 025-29-09, +7 929 646-55-05
https://shop.heine-med.ru | Электронная почта: medtexst@yandex.ru

HEINE Optotechnik GmbH & Co. KG
Dornierstr. 6, 82205 Gilching, Germany
www.heine.com

We reserve the right to change specification without notice.