HEINE SLR | SLM Camera Adapter flow

FIRST STEPS

Meaningful and detailed digital images of the highest quality contribute to binding and comprehensible documentation. The combination of the SLR | SLM Camera Adapter flow, a HEINE dermatoscope and a DSLR or DSLM camera creates a flexible system for quickly switching between dermatoscopic overview and detailed images during the diagnosis. For an accurate overview and precise detailed view.

AT A GLANCE

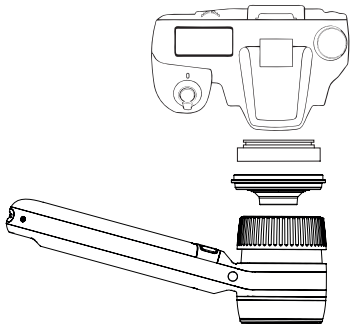

The HEINE SLR | SLM Camera Adapter flow can be used with a DSLR or DSLM camera with an existing fixed focal length lens that has an M52 or M49 connection thread. It is suitable for use with the HEINE DELTA 30 PRO and the HEINE DELTA 30. Any reference to the DELTA 30 PRO in this document is a reference to both instruments.

Depending on the camera|lens combination or sensor format, there may be slight cropping or vignetting (darkening) at the edge of the image due to the design.

HEINE recommends lenses with a fixed focal length from the following manufacturers:

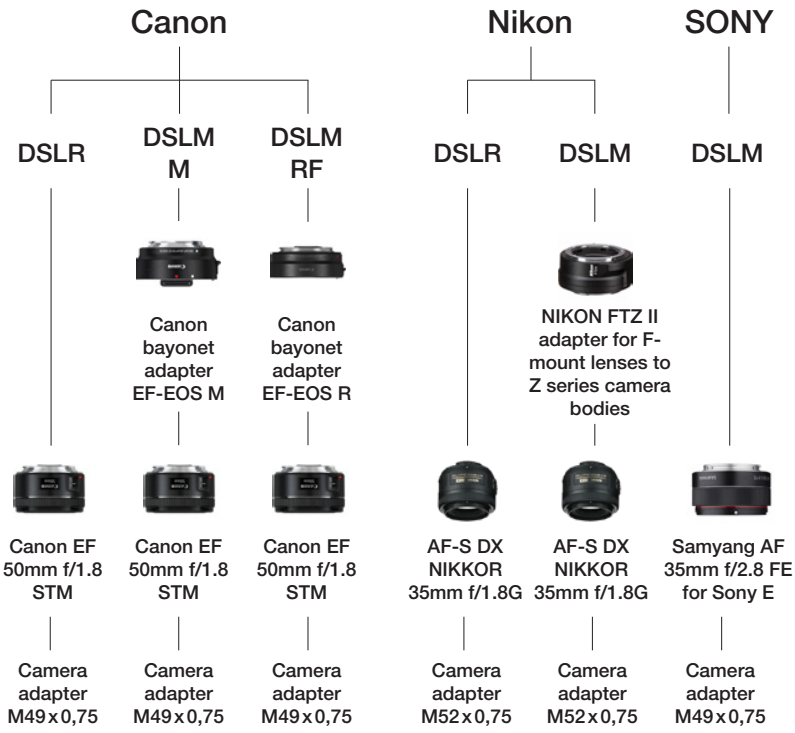

HEINE has tested these lenses and can confirm that they enable smooth interaction between the camera and the SLR | SLM Camera Adapter flow.

If you would like to use other lenses, please ensure that the lens has a focal length of approximately 3 – 50 mm and a minimum focusing distance of approximately 0.35 m or less. Due to the design, the autofocus may not work with lenses other than the ones that HEINE has recommended for use together with the SLR | SLM Camera Adapter flow, or the image quality may be reduced due to distortion, shading or blurring in the image.

These HEINE camera adapters including the bayonet adapters are available for the following digital cameras:

Brand	Filter thread	HEINE SLR | SLM Camera Adapter flow
NIKON	M52 x 0,75	K-000.34.148
SONY and Canon	M49 x 0,75	K-000.34.147

There may be problems with the autofocus in these two cases:

- The camera cannot find any structures to focus on. In this case, this has nothing to do with the lens, but with the algorithm used by the camera to calculate the image sharpness. It is also possible that the focus measurement range is outside the structures that the camera needs to set the correct focus.

- If a lens is used that is not recommended by HEINE, it is possible that the autofocus motor cannot move the lens including the dermatoscope or issues a fault message.

LET'S GET STARTED!

- **Assembly**

For complete assembly, you need a digital camera, a lens with fixed focal length, a HEINE DELTA 30 PRO or HEINE DELTA 30 and the HEINE SLR | SLM Camera Adapter flow. You may need an additional adapter if you would like to use an SLR lens on a DSLM camera.

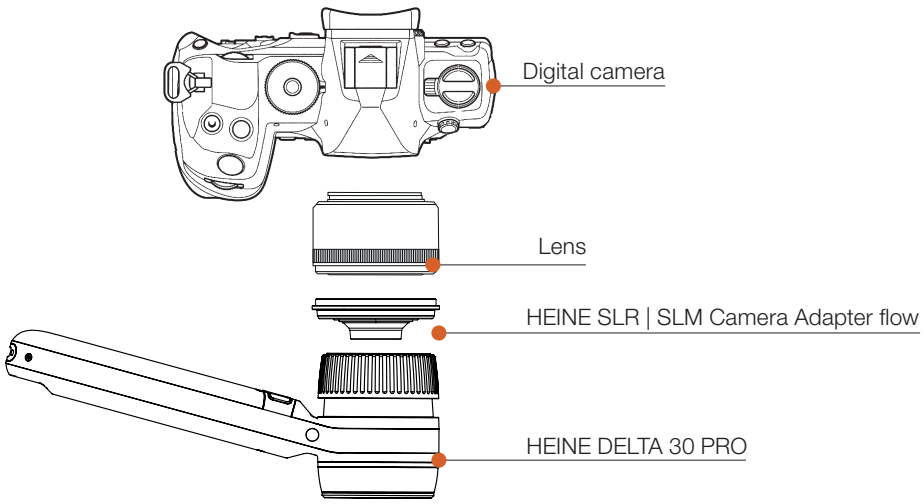

- Screw the camera adapter onto the lens' filter thread connection. Ensure that the adapter is not screwed on too tightly so that it is easy to remove from the lens after capturing the images.

- ▷ Turn the eyepiece on the dermatoscope to the centre position. The edge of the eyepiece ring of the HEINE DELTA 30 PRO should be slightly above the centre line on the scale.
- ▷ If you are using the diSTANCE working ring (optional) when capturing images, the eyepiece must be turned to the lowest setting due to the level of the skin to be observed being further away.
- ▷ Guide the camera adapter to the eyepiece of the dermatoscope until an adequate magnetic connection has been established between the eyepiece ring and the camera adapter.
- ▷ Switch on the dermatoscope. Select the highest light intensity level and the desired colour temperature for the HEINE DELTA 30 PRO.
- ▷ Once you have set up the camera correctly (see the instructions below) and focussed the image by turning the eyepiece ring, you can start taking dermatoscopic images.
- ▷ To quickly switch to overview dermatoscopy, detach the dermatoscope from the camera adapter by tilting it slightly and simply pulling it off.
- ▷ **Attention! Always** hold the dermatoscope with one hand and the camera with the other. The camera adapter's magnetic force is **not enough** to hold your camera or dermatoscope securely without the support of your hands.

▶ Adjusting the camera settings for detailed dermatoscopic images

- ▷ Automatic mode

  The camera can be set to automatic mode to make integrating the adapter into your workflow as easy as possible. Ensure that the ambient light is adequate in the 'without flash' setting. The camera will then automatically adjust all of the relevant image parameters to the ambient light during dermatoscopic overview and detailed imaging. Please note that the colour in the dermatoscopic macro images may look slightly unnatural depending on the camera's automatic white balance.

▷ Optimum settings

As a rule, all digital cameras have a rotary dial on the top, which is labelled with letters, numbers and symbols. This sets the camera operating mode. Please ensure that the dermatoscope is set to the highest light intensity level when taking pictures.
HEINE recommends the ‘P’ setting for Canon, Nikon and Sony cameras. The ISO sensitivity and shutter speed are set manually on the camera in this mode.
All 3 recommended lenses with fixed focal length enable autofocus operation and individual image settings.

▷ White balance

The colours of your images may look unnatural if your camera’s automatic white balance is activated. If it is activated, please use your camera’s preset settings. You will achieve the best result if you use your camera’s manual or ‘custom’ white balance.

The suitable presets for the HEINE DELTA 30 have a value between 5,000 K and 6,000 K for the colour temperature. (These are the ‘Direct sunlight’ or ‘Flash’ settings on some camera models.)

The suitable presets for the HEINE DELTA 30 PRO depend on the colour temperature set on the device:

Colour of the colorSHIFT status indicator	Suitable preset
Orange	Select a value between 5,000 K and 6,000 K for the colour temperature. The ‘Direct sunlight’ or ‘Flash’ settings are suitable on some camera models.
Purple	Select a value between 6,000 K and 7,000 K for the colour temperature. The ‘Cloudy’ or ‘Daylight fluorescent tube’ settings are suitable on some camera models.
Light blue	Select a value between 7,000 K and 8,000 K for the colour temperature. The ‘Shade’ or ‘Daylight fluorescent tube’ settings are suitable on some camera models.
Dark blue	Select a value between 8,000 K and higher for the colour temperature. The ‘Shade’ setting is suitable on some camera models.

For more information on setting the manual white balance, please refer to the user manual for your camera model. Please ensure that the colour temperature set on the HEINE DELTA 30 PRO matches the camera settings.

- **‘P’ camera operating mode**
  We recommend the ‘P’ operating mode for reliable and reproducible results. You can set the parameters described above yourself in this mode.
  HEINE recommends an exposure time of 1/250 sec. at an ISO sensitivity of 100. The f-number is calculated and set by the camera on the lens in this mode.

- **Recommended image format**
  HEINE recommends the APS-C or DX format (also known as ‘compact format’). This allows you to create an uncropped image in a sufficient size for your images. Our lens recommendations only refer to this format.
  Full-format images are possible, but the edges of the adapter’s lens optics are visible and blurring occurs at the outer edge of the image. Most digital cameras with a full-format image sensor can easily be converted to the slightly smaller compact format.

- **Image quality**
  We recommend setting ‘Fine jpg’ or a correspondingly high-res format on the camera for the highest image quality. Compression artefacts may distort the image at low quality levels.

Camera parameters	DELTA 30 PRO	DELTA 30	Remarks
White balance	Auto	Auto	Result may appear unnatural in terms of colour. Very much depends on the camera manufacturer and camera model
	Warm white Fluorescent preset Sunlight preset **Neutral** Cloudy **Coldwhite** Shady **Blue cold white** Shady	Fluorescent preset Sunlight preset	Very good results can be achieved in terms of colour depending on the manufacturer and camera model
	Manual For every colour temperature	Manual	Optimum results
ISO sensitivity	100	100	Set the dermatoscope to the highest light intensity
Exposure time	1/250	1/250	Set the dermatoscope to the highest light intensity
Camera operating mode	P	P	
Recommended image format	APS-C, DX	APS-C, DX	Full format is possible, but with lower sharpness at the edge, greater distortion and visible edge cropping
Image quality	Fine jpg	Fine jpg	Select the format with the lowest compression

MORE INFORMATION

If you have any further questions about the product or the correct application, you can contact our Customer Support team or an authorised distributor in your local area at any time.

info@heine.com

www.heine.com/en/contact

www.heine.com/en/find-a-distributor

WARNINGS AND SAFETY INFORMATION



▷ **CAUTION!** This symbol indicates potential hazardous situations. Ignoring the corresponding instructions may lead to dangerous situations of mild to moderate extent. (Background colour yellow; foreground colour black).



▷ **NOTE!** This symbol indicates valuable advice in terms of set up, operation or maintenance, as applicable. Notes are important, but not related to hazardous situations.

▶ Description

The HEINE SLR | SLM Camera Adapter flow with HEINE DELTA 30 and HEINE DELTA 30 PRO has been exclusively developed and optimized for a rapid and systematic documentation of pigmented lesions and does not replace a medical diagnosis. No diagnoses should be made based on a digital image alone.

▶ Cleaning, disinfection and sterilization

A dry cloth is recommended for cleaning the SLR | SLM Camera Adapter flow. Disinfection and sterilization are not necessary as the SLR | SLM Camera Adapter flow does not come into contact with the patient. Do not spray the device with liquids.

▶ Maintenance

The device is maintenance free.

▶ Service

The device has no components serviceable by the end-user.



▶ General Notes

The warranty for the entire product is invalidated if non-genuine HEINE products or non-original parts are used and if repairs or modifications are made to the device by persons not authorized by HEINE. For more information, please visit www.heine.com.

The expected life cycle, when the device is normal used and the warning and safety information as well as the maintenance instructions are observed, is up to 7 years. Beyond this period, the product may continue to be used if it is in a safe and good condition.



▶ General Warnings

Check the correct operation of the device before use! Do not use the device if there are visible signs of damage. Do not modify the device. Use only original HEINE parts, spare parts, accessories and power sources. Repairs shall only be carried out by qualified persons.

▶ Explanation of utilized symbols

The following symbols are used on the device or on the packaging.

REF	Catalogue- or reference number
	Manufacturer
	Please read and follow these instructions for use and keep them for future reference. (Background: blue, foreground: white)
UDI	Unique Device Identification

HEINE Optotechnik GmbH & Co. KG | Dornierstr. 6 | 82205 Gilching | Deutschland Тел.: +49 8105 7728 0
Факс: +49 8105 7728 202 | Электронная почта: info@heine.com
ООО «МЕДТЕХНИКА-СТОЛИЦА» Москва
Уполномоченный представитель, импортёр и дистрибьютор HEINE Optotechnik GmbH & Co. KG в РФ
Тел.: +7 967 025-29-09, +7 929 646-55-05
https://shop.heine-med.ru | Электронная почта: medtexst@yandex.ru

HEINE Optotechnik GmbH & Co. KG
Dornierstr. 6, 82205 Gilching, Germany
www.heine.com

We reserve the right to change specification without notice.